Scheduled Beacon Tone Transmission

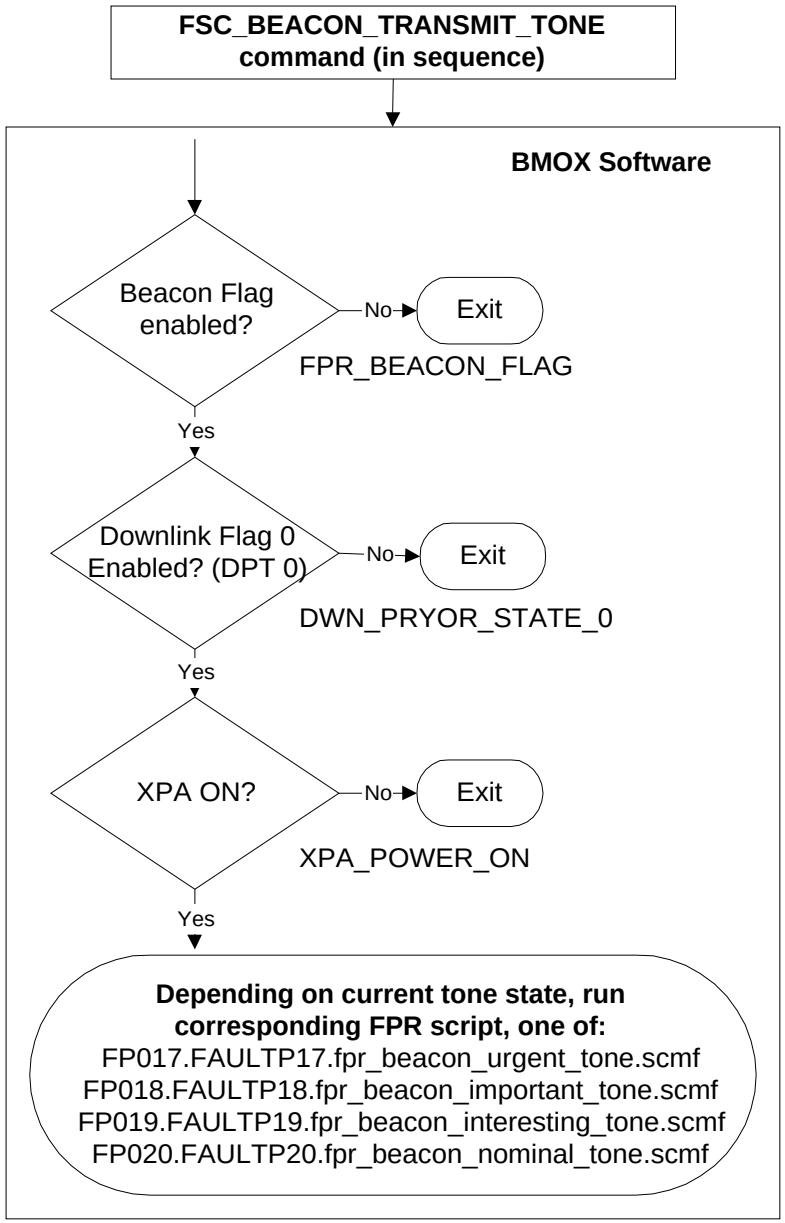

FP0xx.FAULTPxx.fpr_beacon_*tonename*_tone.scmf

```
SET_ENCODING        00:00:01.000,0010025905:2,VC2,"X","OFF"
SET_ENCODING        00:00:02.000,0010025905:2,VC2,"X","OFF"
SET_DL_MOD_INDEX    00:00:03.000,0010025901:2,VC2,"X",49
SET_DL_MOD_INDEX    00:00:04.000,0010025901:2,VC2,"X",49
SET_SUBCR_FREQ      00:00:05.000,0010025900:2,VC2,"X","toneval"
SET_SUBCR_FREQ      00:00:06.000,0010025900:2,VC2,"X","toneval"
EXCITER_POWER       00:00:07.000,0010025917:2,VC2,"X","ON"
EXCITER_POWER       00:00:08.000,0010025917:2,VC2,"X","ON"
(turn off stuff next)
SET_ENCODING        01:00:09.000,0010025905:2,VC2,"X","15_6"
SET_ENCODING        01:00:10.000,0010025905:2,VC2,"X","15_6"
SET_DL_MOD_INDEX    01:00:11.000,0010025901:2,VC2,"X",38
SET_DL_MOD_INDEX    01:00:12.000,0010025901:2,VC2,"X",38
SET_SUBCR_FREQ      01:00:13.000,0010025900:2,VC2,"X",375
SET_SUBCR_FREQ      01:00:14.000,0010025900:2,VC2,"X",375
```

where toneval is:
20 Urgent tone
25 Important tone
30 Interesting tone
35 Nominal tone

Notes:

- Subcarrier frequency is 25 for LGA and 375 for HGA.
- Downlink mod index changes with spacecraft distance and antenna used.
- During thrusting, the following command (pair) must be included at the end of the script:

```
EXCITER_POWER       01:00:15.000,0010025917:2,VC2,"X","OFF"
```

Beacon STANDBY Sequences

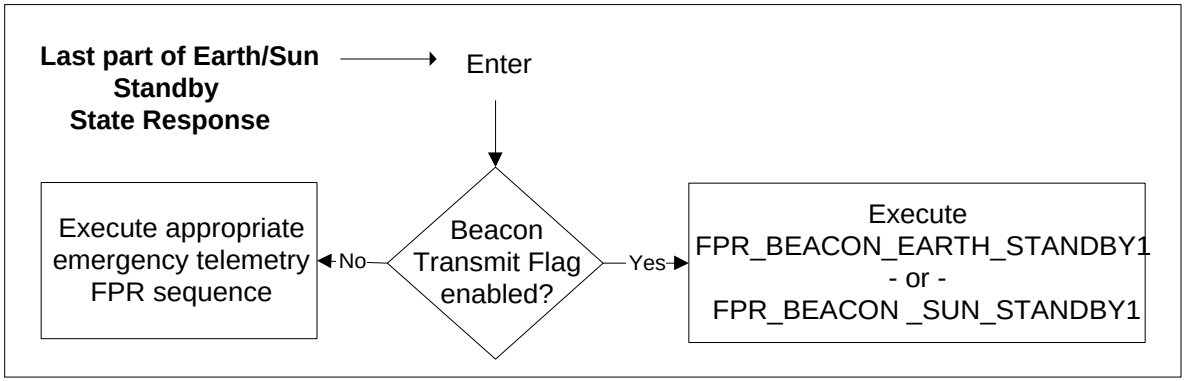

FPR_BEACON_EARTH_STANDBY1

0:00:00 SDST_RESET Reset to ensure good configuration
0:00:01 SDST_RT_TIMEOUT ENABLE Required after reset
0:00:02 SET_UPLINK 7.8125 7.8125 bps
0:00:03 COHERENCY DISABL coherency mode disabled (TWNC on)
0:00:04 RANGING X OFF x-band ranging off
0:00:05 SET_SUBCR_MODE X SUBCR x-band sub-carrier x-band sub carrier
0:00:06 SET_SUBCR_FREQ X 375 x-band sub-carrier frequency to 375 kHz through ~L+285 days, then change to 25
0:00:07 SET_DL_MOD_INDEX X 42 modulation index for downlink to 72°
0:00:08 SET_ENCODING X 15_6 x-band encoding mode to 15, 1/6
0:00:09 RANGING KA OFF Ka-band ranging off
0:00:10 SET_SUBCR_MODE KA SUBCR Ka-band subcarrier on
0:00:11 SET_SUBCR_FREQ KA 375 Subcarrier frequency 375 kHz through ~L+285 days, then change to 25
0:00:12 SET_DL_MOD_INDEX KA 45 modulation index for downlink to 68°
0:00:13 SET_ENCODING KA 15_6 select (15,1/6) convolutional encoder
0:00:14 SET_DOWNLINK 2100 downlink rate to 2100 bps, later to 300 bps
0:00:15 SET_DL_CLK_RATE 6X clk rate to 6X
0:00:16 RS_ENCODING ON Reed-Solomon encoding enabled
0:00:17 EXCITER_POWER KA OFF ka-band exciter off
0:00:18 EXCITER_POWER X OFF x-band exciter off
0:00:19 SELECT_ANT_GAIN HGA WTS1 to HGA
0:00:20 XSSPA_POWER ON xpa on
0:00:21 KASSPA_POWER ON kapa on
0:00:27 EXCITER_POWER X ON x-band exciter on
0:00:33 EXCITER_POWER KA ON ka-band exciter on
0:00:43 FP_FAULT_OP XPA ENABLE enable xpa fault
0:00:44 FP_FAULT_OP SDST ENABLE enable sdst fault
0:00:45 FP_MON_OP DWNLNK SC_ENA enable downlink monitor
0:03:45 SET_EHA_RATE 5,5,4,4 rt & rec = 5 sec, r/t & rec update = 4
0:33:45 ACTIVAT_SEQUENCE FAULTP 22 activate beacon earth standby2

FPR_BEACON_SUN_STANDBY1

0:00:00 SDST_RESET Reset to ensure good configuration
0:00:01 SDST_RT_TIMEOUT ENABLE Required after reset
0:00:02 SET_UPLINK 7.8125 7.8125 bps
0:00:03 COHERENCY DISABL coherency mode disabled (TWNC on)
0:00:04 RANGING X OFF x-band ranging off
0:00:05 SET_SUBCR_MODE X SUBCR x-band sub-carrier x-band sub carrier
0:00:06 SET_SUBCR_FREQ X 25 x-band sub-carrier frequency to 25 kHz
0:00:07 SET_DL_MOD_INDEX X 40 modulation index for downlink to 69°
0:00:08 SET_ENCODING X 7_2 x-band encoding mode to 7 1/2
0:00:09 SET_DOWNLINK 2100 2100 bps, then 40 bps, then 10 bps
0:00:10 SET_DL_CLK_RATE 2X clk rate to 2X
0:00:11 RS_ENCODING ON Reed-Solomon encoding enabled
0:00:12 EXCITER_POWER KA OFF ka-band exciter off
0:00:13 EXCITER_POWER X OFF x-band exciter off
0:00:14 SELECT_ANT_GAIN LGA WTS1 to LGA
0:00:15 SELECT_LGA X select LGA +X
0:00:16 KASSPA_POWER OFF kapa off
0:00:17 XSSPA_POWER ON xpa on
0:00:23 EXCITER_POWER X ON x-band exciter on
0:00:33 FP_FAULT_OP XPA ENABLE enable xpa fault
0:00:34 FP_FAULT_OP SDST ENABLE enable sdst fault
0:00:35 FP_MON_OP DWNLNK SC_ENA enable downlink monitor
0:03:35 SET_EHA_RATE 5,5,4,4 rt & rec = 5 sec, r/t & rec update = 4
0:33:35 ACTIVAT_SEQUENCE FAULTP 21 activate beacon sun standby2

These scripts set up telecom for emergency telemetry and then run the beacon script on the next page. They are similar to the standard fault protection telecom scripts except they run the beacon script at the end. There are scripts for both Earth standby and sun standby. The result of this series of scripts is to toggle between emergency telemetry (30 minutes) and beacon tone (25 minutes).

FPR_BEACON_SUN_STANDBY2

```
0:00:01 SET_ENCODING X OFF x-band encoding mode off
0:00:02 SET_ENCODING X OFF x-band encoding mode off
0:00:03 SET_SUBCR_FREQ X 20 x-band sub-carrier frequency to 20 kHz
0:00:04 SET_SUBCR_FREQ X 20 x-band sub-carrier frequency to 20 kHz
0:00:05 SET_DL_MOD_INDEX X 49 modulation index
0:00:06 SET_DL_MOD_INDEX X 49 modulation index
0:00:07 BMOX_TONE_VAL 3 urgent tone
0:25:07 ACTIVAT_SEQUENCE FAULTP 23 activate beacon sun standby3
```

FPR_BEACON_SUN_STANDBY3

```
0:00:01 SET_ENCODING X 7_2 x-band encoding mode to 7 1/2
0:00:02 SET_ENCODING X 7_2 x-band encoding mode to 7 1/2
0:00:03 SET_SUBCR_FREQ X 25 x-band sub-carrier frequency to 25 kHz
0:00:04 SET_SUBCR_FREQ X 25 x-band sub-carrier frequency to 25 kHz
0:00:05 SET_DL_MOD_INDEX X 37 modulation index for downlink to 64°
0:00:06 SET_DL_MOD_INDEX X 37 modulation index for downlink to 64°
0:30:06 ACTIVAT_SEQUENCE FAULTP 21 activate beacon sun standby2
```

FPR_BEACON_EARTH_STANDBY2

```
0:00:01 SET_ENCODING X OFF x-band encoding mode off
0:00:02 SET_ENCODING X OFF x-band encoding mode off
0:00:03 SET_SUBCR_FREQ X 20 x-band sub-carrier frequency to 20 kHz
0:00:04 SET_SUBCR_FREQ X 20 x-band sub-carrier frequency to 20 kHz
0:00:05 SET_DL_MOD_INDEX X 49 modulation index
0:00:06 SET_DL_MOD_INDEX X 49 modulation index
0:00:07 BMOX_TONE_VAL 3 urgent tone
0:25:07 ACTIVAT_SEQUENCE FAULTP 24 activate beacon earth standby3
```

FPR_BEACON_EARTH_STANDBY3

```
0:00:01 SET_ENCODING X 15_6 select (15,1/6) convolutional encoder
0:00:02 SET_ENCODING X 15_6 select (15,1/6) convolutional encoder
0:00:03 SET_SUBCR_FREQ X 375 Subcarrier frequency 375 kHz through
~L+285 days, then change to 25
0:00:04 SET_SUBCR_FREQ X 375 Subcarrier frequency 375 kHz through
~L+285 days, then change to 25
0:00:05 SET_DL_MOD_INDEX X 42 modulation index for downlink to 72°
0:00:06 SET_DL_MOD_INDEX X 42 modulation index for downlink to 72°
0:30:06 ACTIVAT_SEQUENCE FAULTP 22 activate beacon earth standby2
```

These scripts continues to send emergency telemetry for 30 minutes. They then reconfigure for beacon tone transmission and send a tone for 25 minutes. After 25 minutes of tone, they run the last script (standby3).

These scripts reconfigure for emergency telemetry and loop back to the standby2 script.